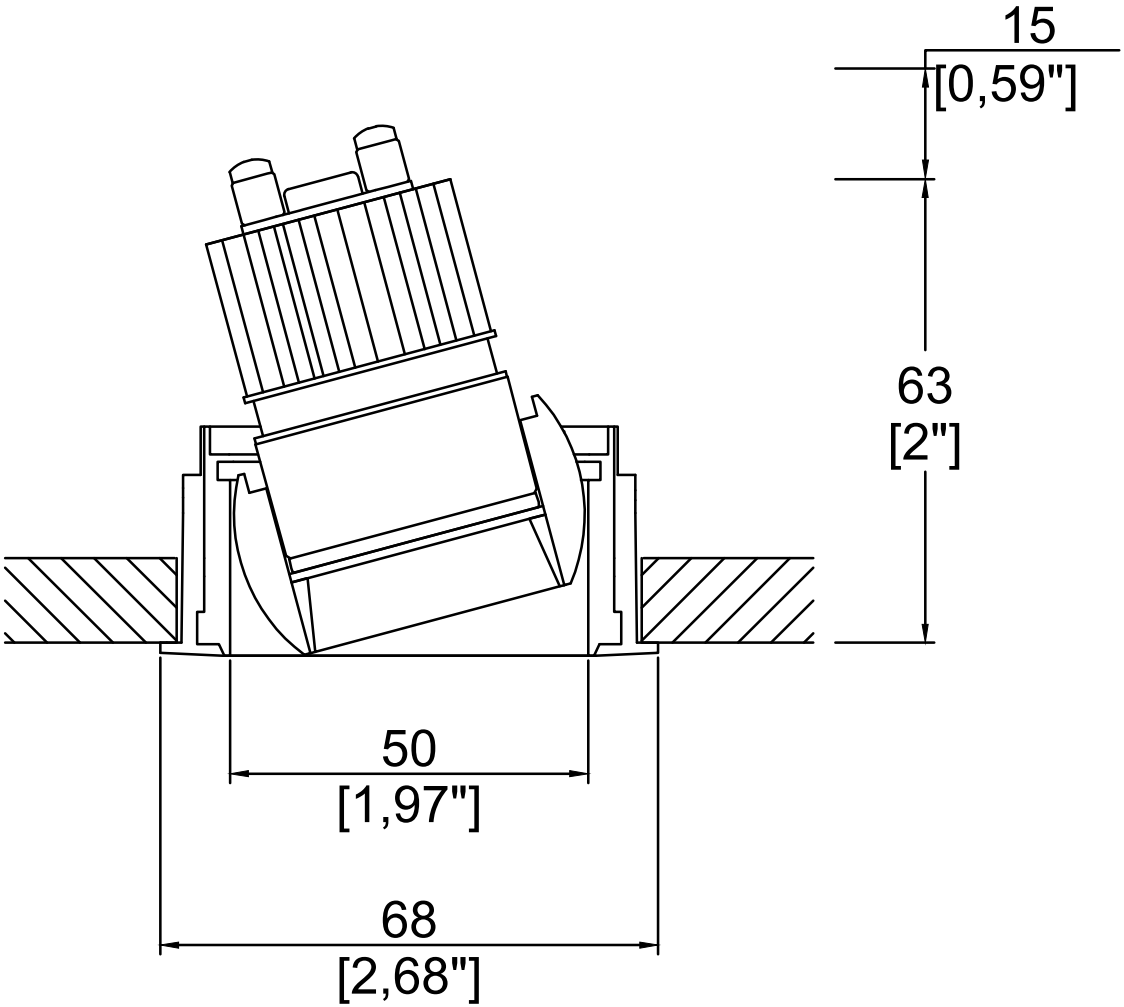
15
[0,59"]
63
[2"]
50
[1,97"]
68
[2,68"]